edesa

GAS **HOBS**

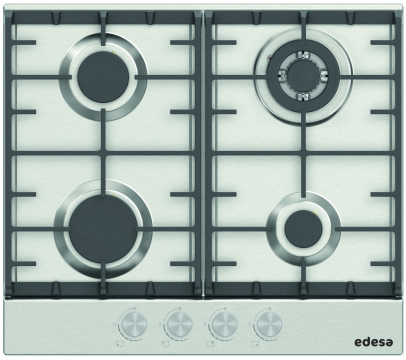

EGX-6041 TI TR CI B

Cod. **922272072** EAN **8422248198363**

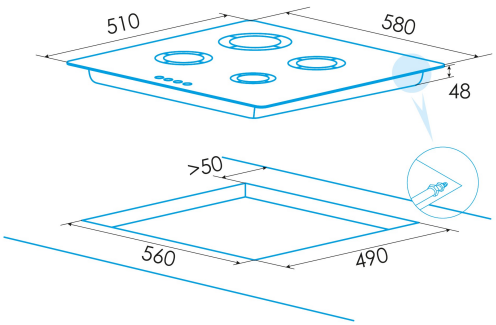

GENERAL INFORMATION

EAN/UPC	8422248198363
Subfamily	Gas

Product sheet

Number of cooking zones	4
Zone 1: Technology	Gas
Zone 1: Type of zone	Rapid
Zone 1: Position	Front Left
Zone 1: Power (kW)	3
Zone 1: Consumption (Wh / kg)	181,783
Zone 2: Technology	Gas
Zone 2: Type of zone	Semirapid
Zone 2: Position	Rear Left
Zone 2: Power (kW)	1,75
Zone 2: Consumption (Wh / kg)	127,248
Zone 3: Technology	Gas
Zone 3: Type of zone	Triple
Zone 3: Position	Rear Right
Zone 3: Power (kW)	3,3
Zone 3: Consumption (Wh / kg)	0,333
Zone 4: Technology	Gas
Zone 4: Type of zone	Auxiliary
Zone 4: Position	Front Right
Zone 4: Power (kW)	1
Zone 4: Consumption (Wh / kg)	72,713

Dimensions

Width (mm)	580
Depth (mm)	510
Built-in width (mm)	560
Built-in depth (mm)	490

Finishing

Material	Stainless Steel
Bevel	No
Frame	No
Cooking supports	Cast Iron

Control

Control type	Mechanical
Control position	Front Centre
Independent zone control	√
Hidden control	-
Power levels	9
Cooking time programming	-
Countdown alarm	-
Power management	-
Available power limits (kW)	No
Connectivity	No
Autoignition	220-240V

Safety

Safety lock	-
Child lock	No
Residual heat indicator	-
Automatic cookware detection	-
Smart cookware detection	-
Automatic safety shutdown	-
Liquid spill detection	-
Safety valve	√

Electrical connection

Nominal voltage (V)	220-240
Nominal frequency (Hz)	50/60
Nominal input power (W)	9,75
Electric shock protection	Class I
Power cord length (m)	1